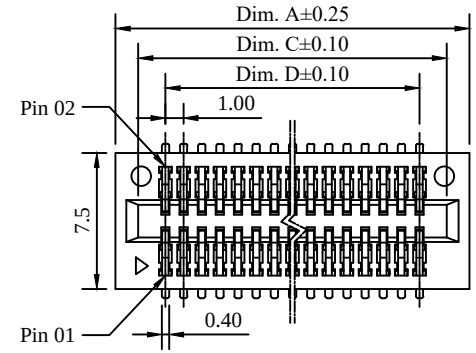

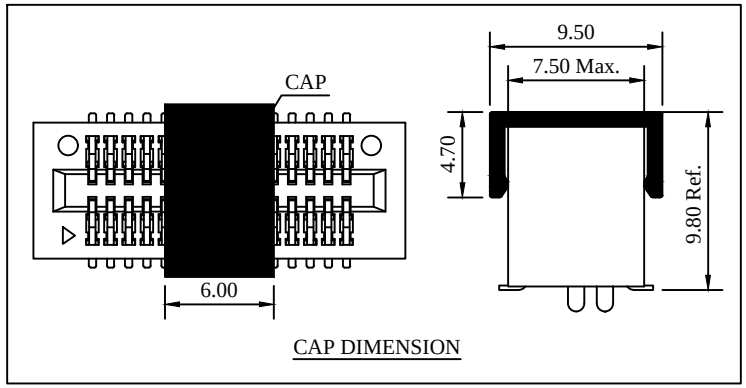

CAP DIMENSION

7000M SERIES (Pitch 1.00 mm SMT Type)

FEATURE

Insulator Material : LCP UL94V-0
Contact Material : Phosphor Bronze
Plating : Selective Gold Plating Over Contact Area
100μ" min. Matte Tin Plating On Solder Area
50μ" min. Nickel Underplating Overall

SPECIFICATION

Current Rating : 1.1 Ampere
Contact Resistance : 30 milliohms maximum
Insulation Resistance : 1000 megohms minimum
Voltage Rating : 500 VAC RMS 1 minute
Operation Temperature Range : -55°C to +105°C

ORDERING INFORMATION

7000M - □□□ - □ - □ - □

- **No. of Contacts**
- **Plating Code**
- **Cap / Film**
  - N : None
  - C : Cap
  - F : Film
- **Other Custom Options**

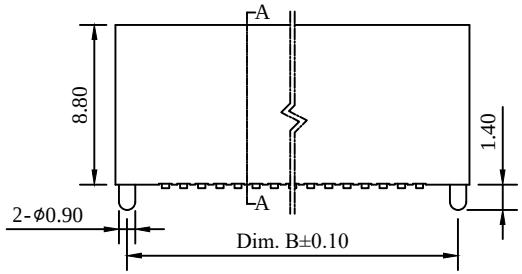

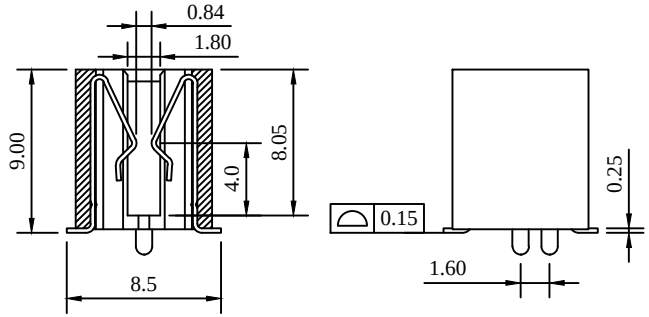

SEC A - A

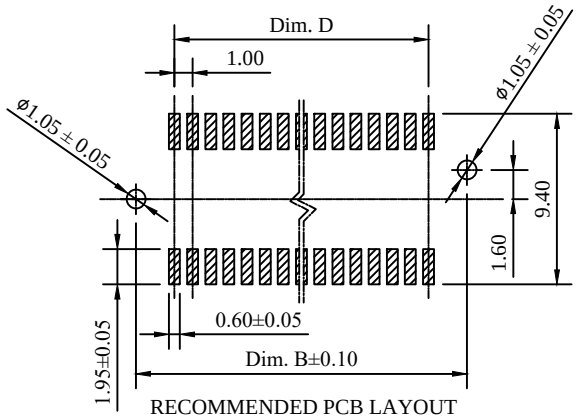

RECOMMENDED PCB LAYOUT

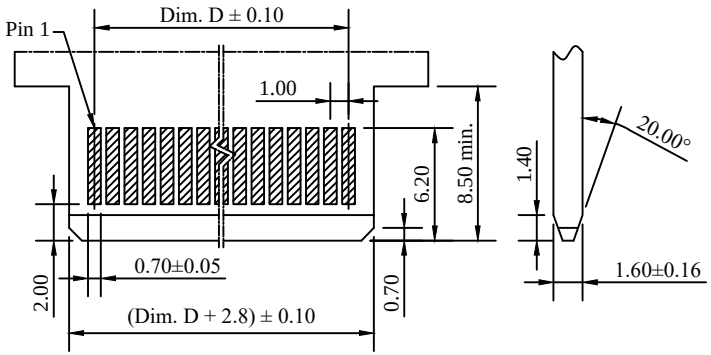

RECOMMENDED PCB LAYOUT

No. of Contacts	Dimensions (Dim.) A	B	C	D	No. of Contacts	Dimensions (Dim.) A	B	C	D
5/10	9.50	8.24	7.00	4.00	30/60	34.50	33.24	32.00	29.00
8/16	12.50	11.24	10.00	7.00	36/72	40.50	39.24	38.00	35.00
10/20	14.50	13.24	12.00	9.00	40/80	44.50	43.24	42.00	39.00
16/32	20.50	19.24	18.00	15.00	60/120	64.50	63.24	62.00	59.00
20/40	24.50	23.24	22.00	19.00	80/160	84.50	83.24	82.00	79.00

Polarization	
No. of Contacts	Polarized Positions (No Contact)
5/10	03, 04
8/16	05, 06
20/40	15, 16
30/60	21, 22
40/80	31, 32
60/120	31, 32, 63, 64

Plating Code	
1	10μ"
2	G/F
3	3μ"
4	5μ"
5	G/F Overall
6	30μ"
7	Tin Overall
8	15μ"
9	20μ"

Title : Customer Drawing	Type : Edgecard Connector		
Part No. : 7000M Series			
Description : Pitch 1.00 mm Edge Card Connector SMT Type Top Insertion Type			
DWG No. : 010 - 0000 - 570M	Date : 06 - Mar. - 2018		
APPD. : James C.	CHK. : Connie Z.	DRW. : Bryant C.	

CTL 彩電企業股份有限公司 CHARTRON INCORPORATION

Tolerances Unless Otherwise Specified :
X. ± 0.50 .X ± 0.25 .XX ± 0.10
.X° ± 2° .XX° ± 1° .XXX° ± 0.1°

Dim.	Scale	Sheet	Rev.
mm	N/A	1 of 1	B